TORSIONALLY RIGID COUPLING

up to 130 KNm and 205 mm bore diameters

ED. 07/2021

德陽興業有限公司
TECH YANG CO., LTD.

台南: 台南市歸仁區保吉路276號A棟
TEL: +886-6-270 9690 / FAX: +886-6-273 9898
台中: 台中市沙鹿區光華路391巷25號
TEL: +886-4-2665 6161 / FAX: +886-4-2665 6633

GTR

GTR - torsionally rigid coupling: introduction

- Made in steel fully turned with standard treatment of phosphating.
- Disc pack in stainless steel.
- High torsional rigidity.
- Maintenance and wear free.
- Version with double disc pack: GTR/D.
- High torque possible.

ON REQUEST

- Use in applications with high operation temperatures (> 150 °C) possible.
- Specific treatments or version in full stainless steel possible (GTR-SS).
- Reinforced couplings for specific requirements and heavy applications.
- Connection to torque limiter (safety coupling) range possible.

Designed to suit applications where high reliability, precision and an optimum weight/power ratio is required; ideally suited for applications with high speeds and power, also offering low overhung loads when using the spacer version.
This coupling is composed of three main items: the two fully turned hubs, made in steel UNI EN ISO 683-1:2018 and the disc pack, in stainless steel AISI 301 C with connection screws in steel class 10.9. In the "double" version, GTR/D, there is also a spacer made to length, also built in steel UNI EN ISO 683-1:2018, fixed between the hubs and the two disc packs.
All the components of GTR couplings, except the spacer of GTR/D, are made and statically balanced in class DIN ISO 1940-1:2003 Q 6.3, before the machining of the keyway.
In accordance to the specific need of the application, it is possible to make static or dynamic balancing on each separate component or on the coupling, fully assembled to customer requirements.

DESCRIPTION OF DISCS

The fundamental elements of this torsionally rigid coupling are the disc packs, built from a series of stainless steel discs type AISI 304-C, connected by steel bushes. This disc pack is connected in an alternate way to the hub flange or the eventual spacer, by using screws in steel class 10.9 and the relevant self-locking nuts.
With reference to the configuration, the disc packs can be:

A) Continuous ring disc pack for 6 screws (coupling sizes 1-7)
B) Sectional disc pack for 6 screws (coupling sizes 8-11)
C) Sectional disc pack for 8 screws (coupling sizes 12-15)

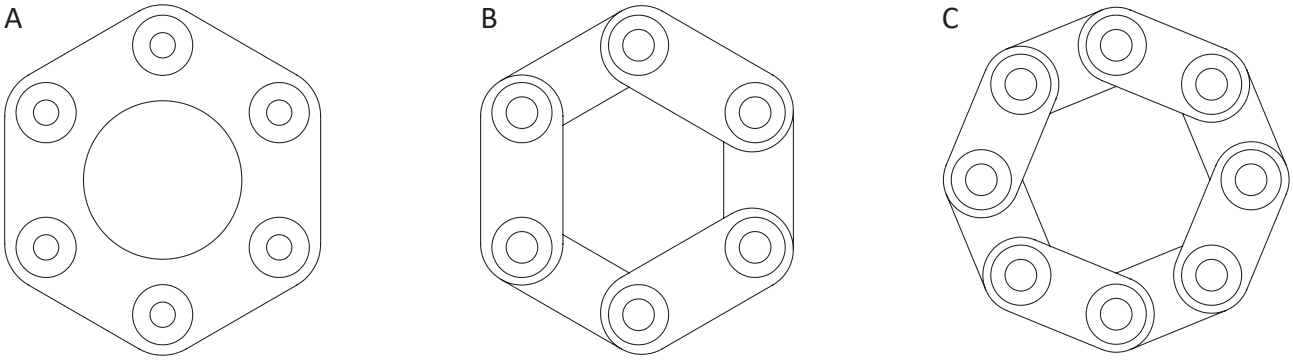

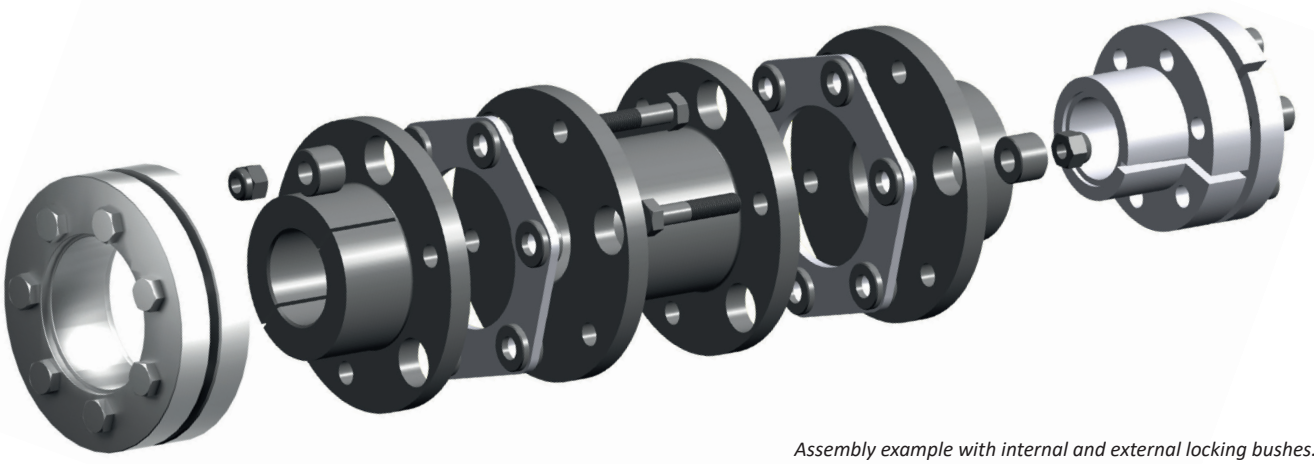

Assembly example with internal and external locking bushes.

Version with personalized spacer for a specific D.B.S.E. (page 12).

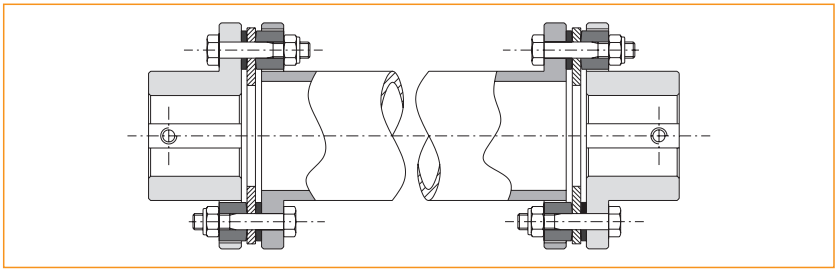

Manufacturing with internal hubs in order to reduce the axial dimensions.

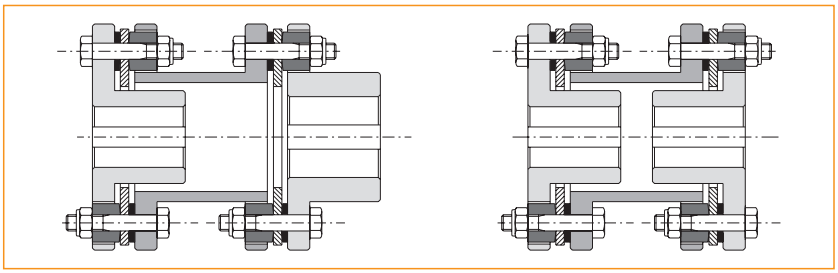

Manufacturing in addition to the /SG torque limiters range, with simple and/or double disc pack.

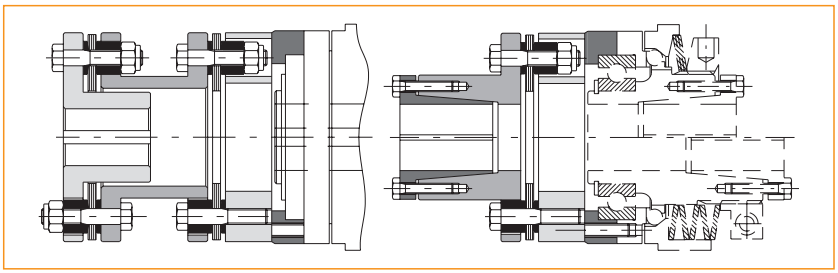

Solution with adaptors both in simple and double version, for easy substitution of disc packs without moving the hubs (in accordance with directive API610).

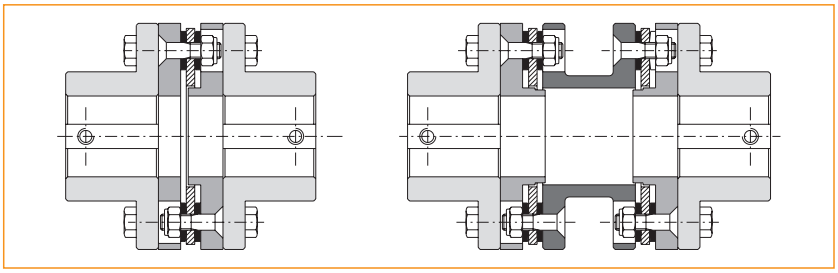

Solution for vertical mounting, where the spacer (GTR/D or GTR/DBSE) has to be supported to avoid the weight by pre-loading the disc pack.

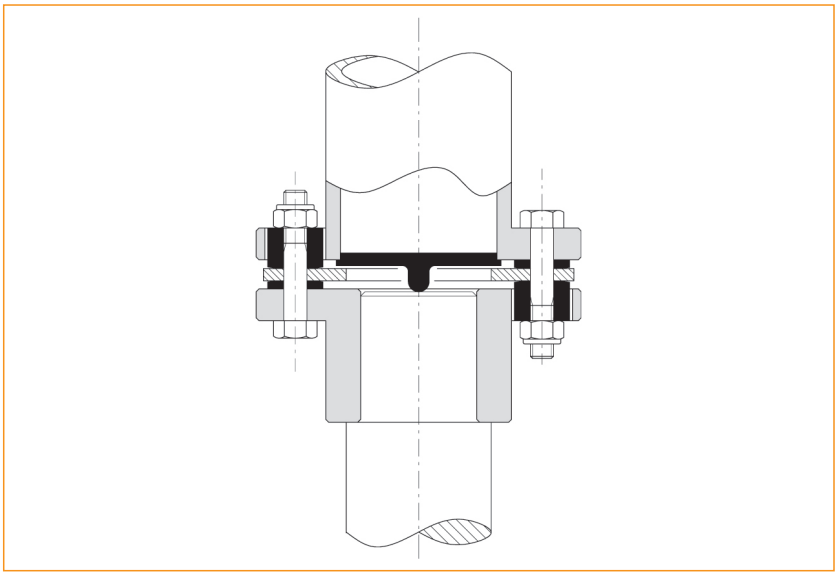

GTR - torsionally rigid coupling: technical data

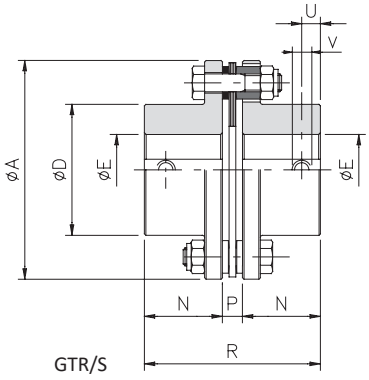

GTR/S

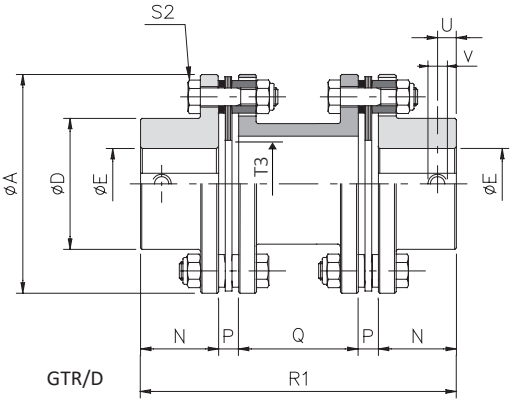

GTR/D

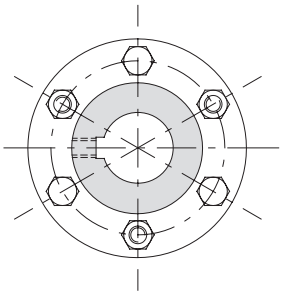

FOR TECHNICAL DATA CONSULT THE DEDICATED BROCHURE

DIMENSIONS

Size	A	D	E H7 max	E4 H7 min	E4 H7 max	N	P	Q ▲min	Q std	R	R1	T3	U	V
0	78	45	32	10	25	29	7,5	36	50	65,5	123	38	8,5	M5
1	80	45	32	10	25	36	8	36	50	80	138	38	8,5	M5
2	92	53	38	12	30	42	8	36	50	92	150	45	10	M5
3	112	64	45	15	35	46	10	47	59	102	171	55	12,5	M8
4	136	76	52	19	45	56	12	51	75	124	211	65	15,5	M8
5	162	92	65	20	55	66	13	60	95	145	253	75	20	M8
6	182	112	80	25	▲ 70	80	14	61	102	174	290	88	20	M8
7	206	128	90	35	▲ 80	92	15	64	101	199	315	105	25	M10
8	226	133	95	35	▲ 80	100	22	86	136	222	380	106	25	M10
9	252	155	110	-	-	110	25	88	130	245	400	128	25	M12
10	296	170	120	-	-	120	32	124	144	272	448	134	25	M12
▲ **11**	318	195	138	-	-	140	32	-	136	312	480	156	30	M16
▲ **12**	352	220	155	-	-	155	32	-	172	342	546	156	40	M20
▲ **13**	386	245	175	-	-	175	37	-	226	387	650	-	40	M20
▲ **14**	426	270	190	-	-	190	37	-	236	417	690	-	45	M24
▲ **15**	456	290	205	-	-	205	42	-	246	452	740	-	45	M24

▲ On request

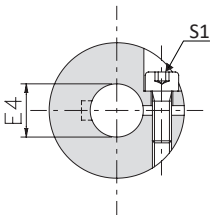

TORQUE PERMISSIBLE WITH CLAMP LOCKING TYPE B (GTR/S; GTR/D; GTR/DBSE)

	Torque transmitted *[Nm]* relative to the ø finished bore *[mm]*																												
Size	10	11	12	14	15	16	18	19	20	22	24	25	28	30	32	35	38	40	42	45	48	50	55	60	65	70	75	80
0	48	49	50	53	54	55	58	59	60	63	65	67																
1	48	49	50	53	54	55	58	59	60	63	65	67																
2			89	92	94	95	98	100	102	105	108	110	115	118														
3				188	190	193	200	203	206	212	218	221	230	236	242	251												
4								233	236	242	248	251	260	266	272	281	290	296	302	311								
5									471	481	491	496	512	522	532	547	563	573	583	599	614	624	650					
▲ **6**												874	897	912	927	949	971	986	1001	1024	1046	1061	1098	1136	1173	1211		
▲ **7**																1329	1358	1378	1397	1427	1456	1476	1524	1573	1622	1671	1720	1769
▲ **8**																1388	1417	1436	1456	1485	1515	1534	1583	1632	1681	1730	1778	1827

▲ On request

TECHNICAL CHARACTERISTICS GTR/S

Size	Torque [Nm]			Weight [Kg]	Inertia [Kgm²]	Max speed *² [Rpm]	Axial load [Kg]	Tightening torque screws [Nm]		Misalignment			Rigidity R_Ts [10³ Nm/rad]
	Nom	Max	Alternating motion					S1	S2	Angular α [°]	Axial x [mm]	Radial k [mm]	
0	60	120	20	1,6	0,00058	14500	10	10,5	12	1°	0,7	-	80
1	100	200	33	1,3	0,00067	14200	14	10,5	12	0° 45’	0,8	-	117
2	150	300	50	2,4	0,00193	12500	19	17	13	0° 45’	0,9	-	156
3	300	600	100	3,9	0,00386	10200	26	43	22	0° 45’	1,2	-	415
4	700	1400	233	6,3	0,00869	8500	34	43	39	0° 45’	1,4	-	970
5	1100	2200	366	10,4	0,01009	7000	53	84	85	0° 45’	1,6	-	1846
6	1700	3400	566	15,6	0,03648	6300	70	145	95	0° 45’	2,0	-	2242
7	2600	5200	866	24,8	0,07735	5500	79	220	127	0° 45’	2,2	-	3511
8	4000	8000	1333	33,0	0,13403	5000	104	220	260	0° 45’	2,4	-	8991
9	7000	14000	2333	42,0	0,25445	4500	115	-	480	0° 45’	2,5	-	11941
10	10000	20000	3333	67,0	0,45019	3800	138	-	760	0° 45’	2,6	-	15720
11	12000	24000	4000	94,0	0,71654	3600	279	-	780	0° 45’	2,9	-	15521
12	25000	50000	8333	130,0	1,22340	3200	484	-	800	0° 30’	2,9	-	37700
13	35000	70000	11666	160,0	1,94410	3000	638	-	1100	0° 30’	3,1	-	51500
14	50000	100000	16666	210,0	3,10950	2700	683	-	1500	0° 30’	3,4	-	64300
15	65000	130000	21666	270,0	4,37920	2500	744	-	2600	0° 30’	3,8	-	69800

TECHNICAL CHARACTERISTICS GTR/D

Size	Torque [Nm]			Weight [Kg]	Inertia [Kgm²]	Max speed *² [Rpm]	Axial load [Kg]	Tightening torque screws [Nm]		Misalignment			Rigidity R_Ts [10³ Nm/rad]
	Nom	Max	Alternating motion					S1	S2	*³ Angular α [°]	Axial x [mm]	Radial K [mm]	
0	60	120	20	1,7	0,00083	14500	10	10,5	12	1°	1,4	0,70	42
1	100	200	33	1,8	0,00092	14200	14	10,5	12	0° 45’	1,6	0,80	51
2	150	300	50	3,5	0,00286	12500	19	17	13	0° 45’	1,8	0,80	71
3	300	600	100	5,8	0,00740	10200	26	43	22	0° 45’	2,4	0,95	184
4	700	1400	233	9,4	0,01660	8500	34	43	39	0° 45’	2,8	1,20	422
5	1100	2200	366	15,2	0,02850	7000	53	84	85	0° 45’	3,2	1,45	803
6	1700	3400	566	23,0	0,06358	6300	70	145	95	0° 45’	4,0	1,55	1019
7	2600	5200	866	34,0	0,12816	5500	79	220	127	0° 45’	4,4	1,55	1596
8	4000	8000	1333	47,0	0,22927	5000	104	220	260	0° 45’	4,8	2,15	3996
9	7000	14000	2333	61,0	0,44598	4500	115	-	480	0° 45’	5,0	2,15	5192
10	10000	20000	3333	96,0	0,79995	3800	138	-	760	0° 45’	5,2	2,40	6690
11	12000	24000	4000	132,0	1,22823	3600	279	-	780	0° 45’	5,8	2,40	6748
12	25000	50000	8333	173,0	1,97120	3200	484	-	800	0° 30’	5,8	1,30	15900
13	35000	70000	11666	208,0	3,06240	3000	638	-	1100	0° 30’	6,2	1,70	21800
14	50000	100000	16666	280,0	4,89420	2700	683	-	1500	0° 30’	6,8	1,80	27000
15	65000	130000	21666	350,0	6,93250	2500	744	-	2600	0° 30’	7,7	1,90	32000

▲ On request

NOTES

- Qstd (*¹) - Different dimensions available on request.
- Max speed (*²) - For higher speeds please contact our technical department.
- Angular misalignment "α" refers to a single disc pack.
- Weights refer to the coupling with pilot bore.
- Inertias refer to the coupling with maximum bore.
- **Choice and availability of different hub connection type see pages 4 and 5.**

GTR/DBSE - torsionally rigid coupling with spacer: introduction

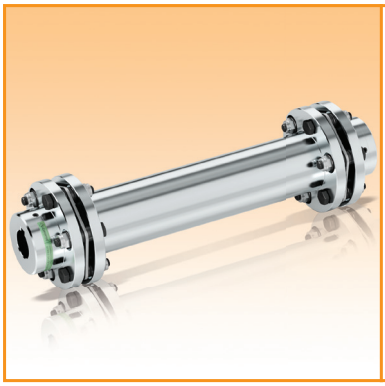

- Made in steel and fully turned.
- Galvanizing corrosion proofing.
- Disk pack in stainless steel.
- Maintenance and wear free.
- Personalized spacer version for a specific D.B.SE.
- Welded spacer for high torsional rigidity.

ON REQUEST

- Use in applications with high operation temperatures (> 150 °C) possible.
- Dynamic balancing up to Q=2,5 possible.
- Customised versions for specific needs.
- Different hub connection type possible (pages 4 and 5).

This backlash free coupling with spacer , called the GTR/DBSE (Distance Between Shaft Ends), consists off a central spacer that is made to order depending on the application and two flexible disc packs and hubs allowing for the connection of two driver shafts located apart.
This type of disc coupling is made of special steel with the disc packs manufactured in AISI 301 stainless steel, in order to obtain a wear and maintenance free flexible coupling. To promote a long life even in adverse conditions the coupling is supplied with an anti-corrosive surface treatment. All the parts of the coupling (with exception of the DBSE spacer version) are statically balanced in class DIN-ISO 1940:1:2003 Q 6.3 before machining of the key and its locking screw.
In accordance with the specific requirements of the application, you can perform a static or dynamic balancing different on each separate component or the coupling fully assembled.

DESCRIPTION OF DISCS

The fundamental elements of this torsionally rigid coupling are the disc packs, built from a series of stainless steel discs type AISI 304-C, connected by steel bushes. This disc pack is connected in an alternate way to the hub flange or the eventual spacer, by using screws in steel class 10.9 and the relevant self-locking nuts.
With reference to the configuration, the disc packs can be:

A) Continuous ring disc pack for 6 screws (coupling sizes 1-7)
B) Sectional disc pack for 6 screws (coupling sizes 8-11)
C) Sectional disc pack for 8 screws (coupling sizes 12-15)

APPLICATION EXAMPLE

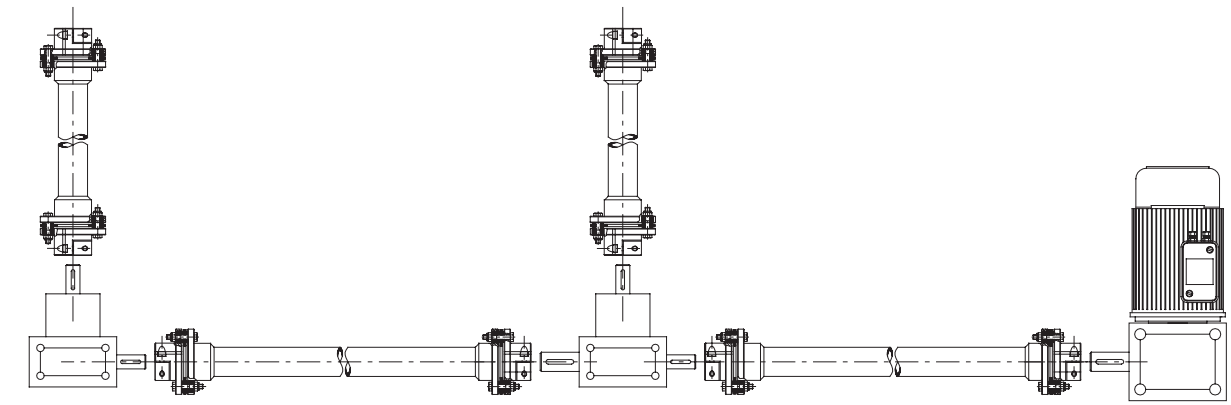

Connecting two driving units situated some distance apart.

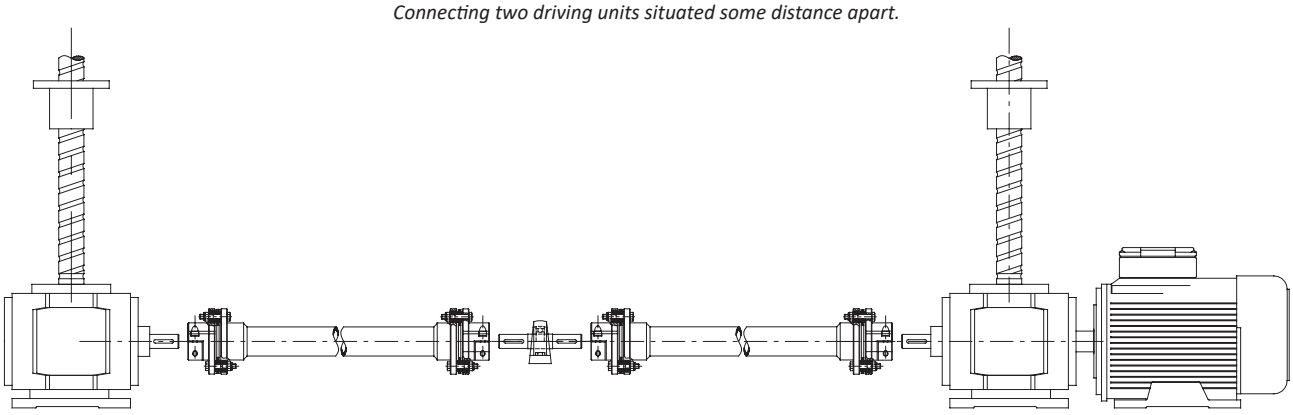

In the case of DBSE> 3 m with high speed, it is necessary to use an intermediate shaft with support and bearing

GTR/DBSE - torsionally rigid coupling with spacer: technical data

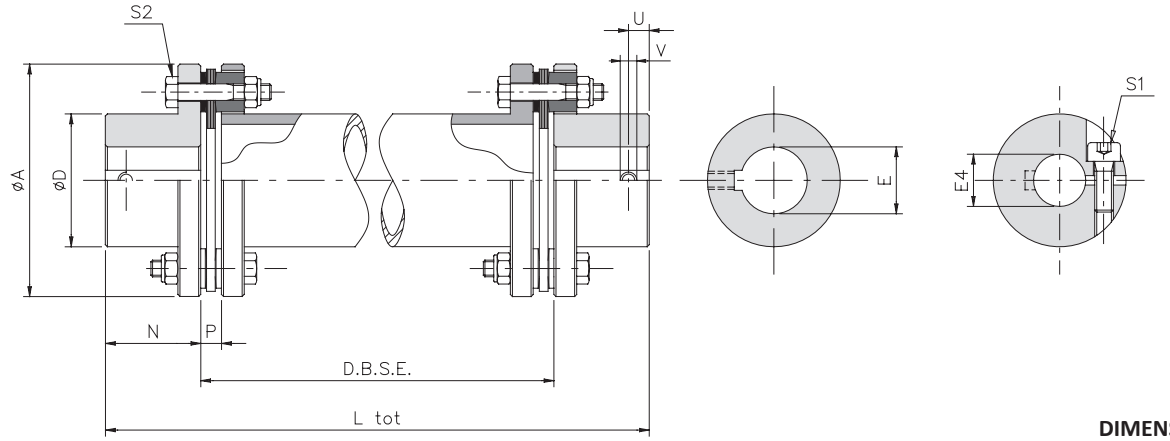

DIMENSIONS

Grand.	A	D	E H7 max	E4 H7 min	E4 H7 max	N	P	U	V	DBSE min	L_{tot}
0	78	45	32	10	25	29	7,5	10	M5	123	= D.B.S.E. + 2 N
1	80	45	32	10	25	36	8	10	M5	124	
2	92	53	38	12	30	42	8	10	M5	126	
3	112	64	45	15	35	46	10	15	M8	152	
4	136	76	52	19	45	56	12	15	M8	156	
5	162	92	65	20	55	66	13	20	M8	134	
▲ **6**	182	112	80	25	70	80	14	20	M8	158	
▲ **7**	206	128	90	35	80	92	15	25	M10	160	
▲ **8**	226	133	95	35	80	100	22	25	M10	184	
▲ **9**	252	155	110	-	-	110	25	25	M12	-	
▲ **10**	296	170	120	-	-	120	32	25	M12	-	
▲ **11**	318	195	138	-	-	140	32	30	M16	-	
▲ **12**	352	220	155	-	-	155	32	40	M20	-	
▲ **13**	386	245	175	-	-	175	37	40	M20	-	
▲ **14**	426	270	190	-	-	190	37	45	M24	-	
▲ **15**	456	290	205		-	205	42	45	M24	-	

TECHNICAL CHARACTERISTICS

Size	Torque [Nm]			Spacer			Total Weight [Kg/m]	Axial load [Kg]	Tightening torque screws [Nm]		Misalignment		
	Nom	Max	Alternating motion	Weight [Kg/m]	Inertia [Kgm^2/m]	Relative rigidity $R_T$rel [10^3 Nm/rad•m]			S1	S2	*3 Angular α [°]	Axial x [mm]	Radial k [mm]
0	60	120	20	5,0	0,00197	12	= weight GTR/S + spacer weight • (DBSE - 2P)	10	10,5	12	1°	1,4	= (DBSE - P) • tg α/2
1	100	200	33	5,0	0,00197	12		14	10,5	12	0° 45’	1,6	
2	150	300	50	5,5	0,00281	21		19	17	13	0° 45’	1,8	
3	300	600	100	5,5	0,00281	29		26	43	22	0° 45’	2,4	
4	700	1400	233	8,0	0,00582	60		34	43	39	0° 45’	2,8	
5	1100	2200	366	13,5	0,01550	148		53	84	85	0° 45’	3,2	
▲ **6**	1700	3400	566	16,0	0,02718	269		70	145	95	0° 45’	4,0	
▲ **7**	2600	5200	866	16,5	0,03096	321		79	220	127	0° 45’	4,4	
▲ **8**	4000	8000	1333	21,5	0,04907	640		104	220	260	0° 45’	4,8	
▲ **9**	7000	14000	2333	30,0	0,10648	-		115	-	480	0° 45’	5,0	
▲ **10**	10000	20000	3333	38,0	0,15508	-		138	-	760	0° 45’	5,2	
▲ **11**	12000	24000	4000	44,0	0,23972	-		279	-	780	0° 45’	5,8	
▲ **12**	25000	50000	8333	62,0	0,41522	-		484	-	800	0° 30’	5,8	
▲ **13**	35000	70000	11666	67,0	0,53907	-		638	-	1100	0° 30’	6,2	
▲ **14**	50000	100000	16666	-	-	-		683	-	1500	0° 30’	6,8	
▲ **15**	65000	130000	21666	-	-	-		744	-	2600	0° 30’	7,7	

▲ On request

NOTES

- Angular misalignment "α" referred to a single disc pack.
- For permitted speeds please check chart on page 14 and/or contact our technical department.
- **Choice and availability of different hub connection type see pages 4 and 5.**

GTR/DBSE - torsionally rigid coupling with spacer: additional information

The model with spacer "GTR/DBSE", in addition to being essential for connecting elements of transmissions situated apart , it is able (unlike the classic model GTR/S) to recover, as needed, up to twice the angular misalignment (figure 2) and axial (figure 3) or a high radial misalignment (figure 1) according to the formula:

$$K = [\ L_{tot} - (2 \cdot N) - P\ ] \cdot Tg\ \alpha$$

Where:
- K = Radial misalignment *[mm]*
- L_{tot} = Total length GTR/DBSE coupling *[mm]*
- N = Useful length of an half-hub *[mm]*
- P = Useful part of elastic element *[mm]*
- α = Angular misalignment GTR/S *[°]*

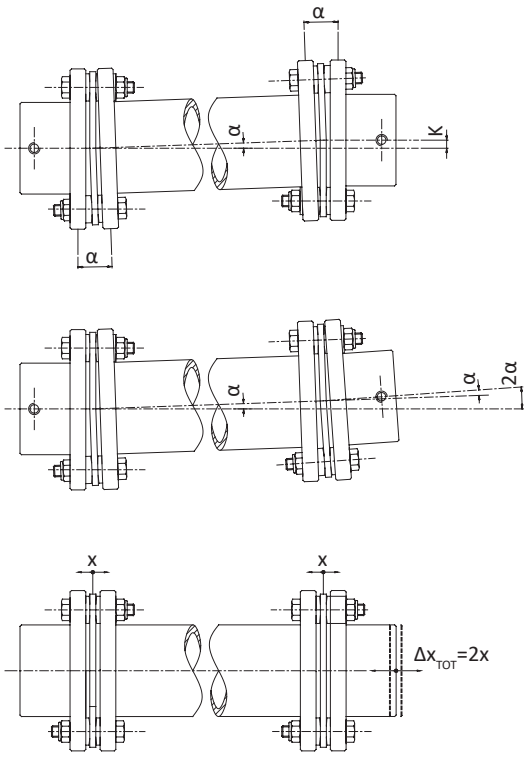

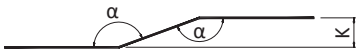

1. Radial misalignment

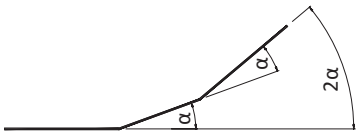

2. Angular misalignment

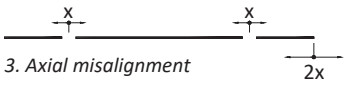

3. Axial misalignment

It is also possible to determine the positioning error through the torsion angle according to the formula:

$$\beta = \frac{180 \cdot C_{mot}}{\pi \cdot R_{TOT}}$$

Where:
- β = Torsion angle *[°]*
- C_{mot} = Max torque motor side *[Nm]*
- R_{TOT} = Total torsional rigidity of coupling *[Nm/rad]*

The total torsional rigidity of the GTR/DBSE coupling is expressed by the formula:

$$R_{TOT} = \frac{1}{\left(\frac{2}{R_T s} + \frac{L_t}{R_T rel}\right)}$$

Dove:
- R_{TOT} = Total torsional rigidity of coupling GTR/DBSE *[Nm/rad]*
- $R_T s$ = Torsional rigidity of coupling GTR/S *[Nm/rad]*
- $R_T rel$ = Relative rigidity of spacer *[Nm/rad]*
- L_t = Spacer length (=DBSE-2P) *[m]*

The maximum speed of the coupling is influenced by several factors:

- Peripheral speed of the coupling;
- Weight of the coupling;
- Length of the spacer;
- Rigidity of the coupling;
- Quality of balance.

In general, for most applications that require the GTR/DBSE model, dynamic balancing is NOT required. In other cases there need to evaluate in reference to the graphic 4 in function of the speed and the length of the extension custom.

In the case of a long DBSE combined with high speed, it may be necessary to use an intermediate shaft with bearing support. Please consult our Technical Department.

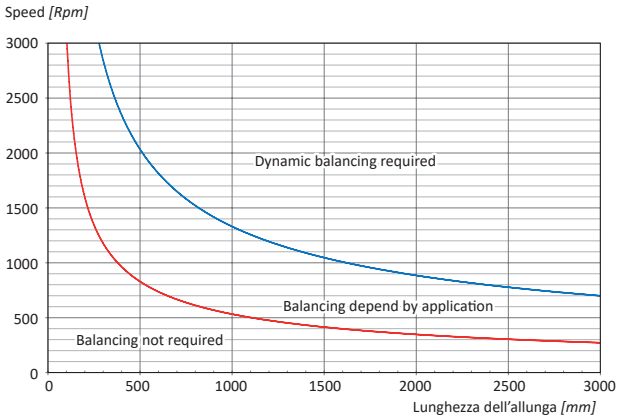

4. Balancing ratio in function of DBSE (GTR/DBSE)

For pre-selection of the coupling's size you can use the generic formula indicated on page 6.
The GTR coupling will accomodate momentary peak torque "C.C." of 2,5 times than nominal torque.
If the C.C. is higher than 2,5 times than the nominal torque, it is necessary to choose the coupling using the following formula:

$$C'_{nom} = \frac{C.C.}{2,5}$$

$$C_{nom} \geq C'_{nom}$$

Where:
C'_{nom} = theoretic nominal torque of the coupling *[Nm]*
C_{nom} = effective nominal torque of the coupling *[Nm]*
C.C. = peak torque *[Nm]*

The nominal torque indicated on the catalogue for GTR coupling refers to the static torque 2 times lower than the nominal torque, with service factor f=1.5. On the contrary, if the static torque of the motor is two times higher than the nominal one, it is possible using the following formula:

$$C_{nom} = \frac{C_{spunto}}{1,5}$$

$$C_{nom} \geq C'_{nom}$$

Where:
C'_{nom} = theoretic nominal torque of the coupling *[Nm]*
C_{nom} = effective nominal torque of the coupling *[Nm]*
C_{spunto} = peak torque *[Nm]*

Having calculated the theoretical nominal torque (C'nom), so that the coupling can be sized correctly it is necessary, to compare the effective technical characteristics of GTR (pages 8-9) and to choose the size able to transmit an effective nominal torque (Cnom) higher or equal to the one found by the described formulae above.

Having established the size of the coupling to be used, it is possible to make other checks considering further parameters:

$$C_{nom} > \frac{9550 \cdot P}{n} \cdot f \cdot f_T \cdot f_D$$

$$C_{nom} > \frac{9550 \cdot P}{n} \cdot f_K \cdot f_T \cdot f_D$$

Dove:
C_{nom} = nominal torque of the coupling *[Nm]*
f = service factor (pag.5)
f_T = thermic factor (grafico 1)
f_D = direction factor
f_K = load factor
n = speed *[Rpm]*
P = applied power *[Kw]*

Direction factor (f_D)
1 = one-direction rotation
2 = alternate rotation

Load factor (fk)
1,5 = continuous load
2 = discontinuous load
1,5÷2 = machine tool
2,5÷4 = shock load

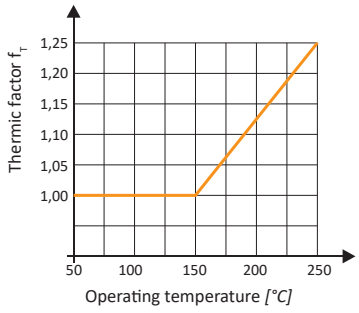

1. Thermic factor (f_T) in function of the operating temperature [°C]

Once the torque to be transmitted has been calculated and verified , it is necessary to consider flexibility offered by the chosen coupling with actual misalignments present between the shafts to be connected.
It is important to note that the axial and radial misalignments permitted are inversely proportional (where one increases the other must decrease). If all types of misalignment are present in the assembly it is important the total sum as a percentage to not exceed 100% as shown in graphic 2.

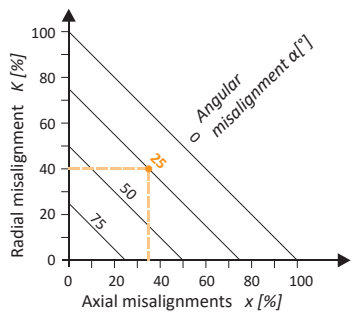

2. Allowed ratio between misalignments [%]

GTR & GTR/DBSE - torsionally rigid coupling: additional information

The rated outputs on the catalogue refer to normal use without shocks and with shafts well-aligned with the environmental temperature
The value of axial thrust (+- 20%) is relevant to the axial movement (graphic 7).

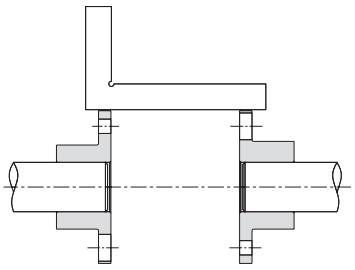

5.

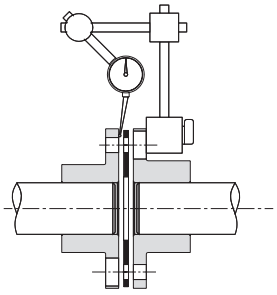

6.

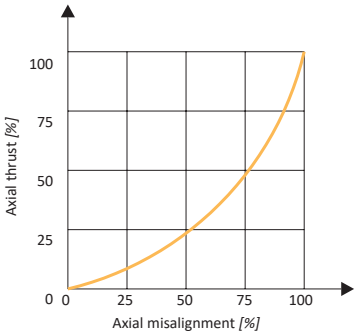

7. Relation between axial force [%] and axial misalignment [%]

The maximum speed of the coupling is influenced by several factors:

- Peripheral speed of the coupling;
- Weight of the coupling;
- Length of the spacer (pages 12-14);
- Rigidity of the coupling;
- Quality of balance.

In general, for most applications dynamic balancing is NOT required; in other cases there is need to evaluate in reference to the graphic 8.

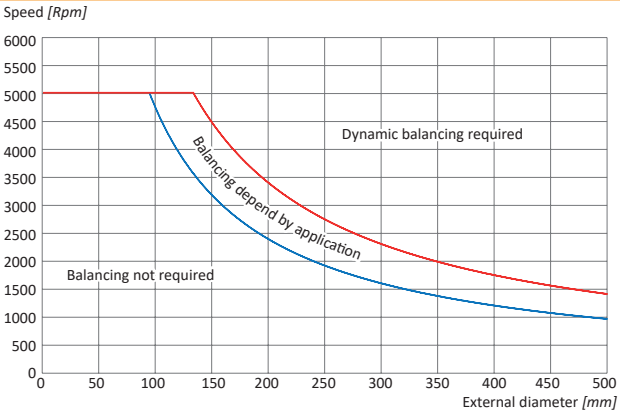

8. Balance ratio in relation to the size of the coupling (GTR/S – GTR/D)

FITTING

1) Achieve radial and axial alignment as precisely as possible to permit the maximum absorption of possible misalignments and life of the coupling (picture 5 and 6).
2) Make sure that the shafts are assembled so that its extremity is square with the surface of the half-coupling (the length of the spacer including two disc packs should be equal to the distance between the two shafts) (picture 9).
3) Tightening the screws with a torque wrench in a cross sequence, continuously until you obtain the tightening torque indicated in the catalogue. It is recommended that only the nut/bolt not in contact with the disk pack is rotated to prevent twisting of the laminations.
4) Finally it is necessary to check and ensure the disc packs are perfectly perpendicular to the shaft axis. It may be necessary to release and tighten some screws again.

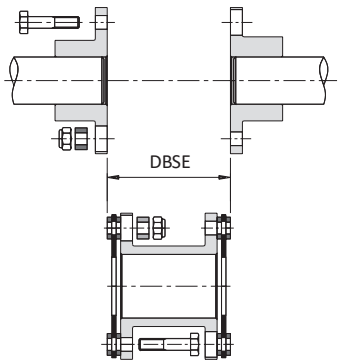

9.

In the coupling with spacer (GTR/D and GTR/DBSE), the central part of the couplings (spacing bar) can be considered as a weight suspended between two springs (lamellar pack). It will have a natural frequency which, if excited, can produce some oscillations of the spacer causing damage to packs. It is recommended to increase the distance between the flanges of the hubs compared to the nominal dimentions “DBSE” (picture 9) by 1,5-2 mm to decrease the natural axial frequency.
In this way the lamellar packs are kept under tension and the possibility of spacer oscillation reduces.
Note: about installation in vertical position please see execution proposal at page 9.

ORDER EXAMPLE

TORSIONALLY RIGID COUPLING						
Model	Size	Bore 1	Hub connection bore 1	Bore 2	Hub connection bore 2	● DBSE
GTR	**2**	**d_1=25 H7**	**A1**	**d_2=38 H7**	**A1**	**-**

Model	
GTR/S	Simple torsionally rigid coupling
GTR/D	Double torsionally rigid coupling
● GTR/DBSE	Torsionally rigid coupling with spacer
GTR-SS	Stainless steel version

Size
from 0 to 15

Hub connection
See hub connection type list at page 4

● In case of GTR/DBSE model indicate the distance between shaft ends
Example DBSE = 180mm